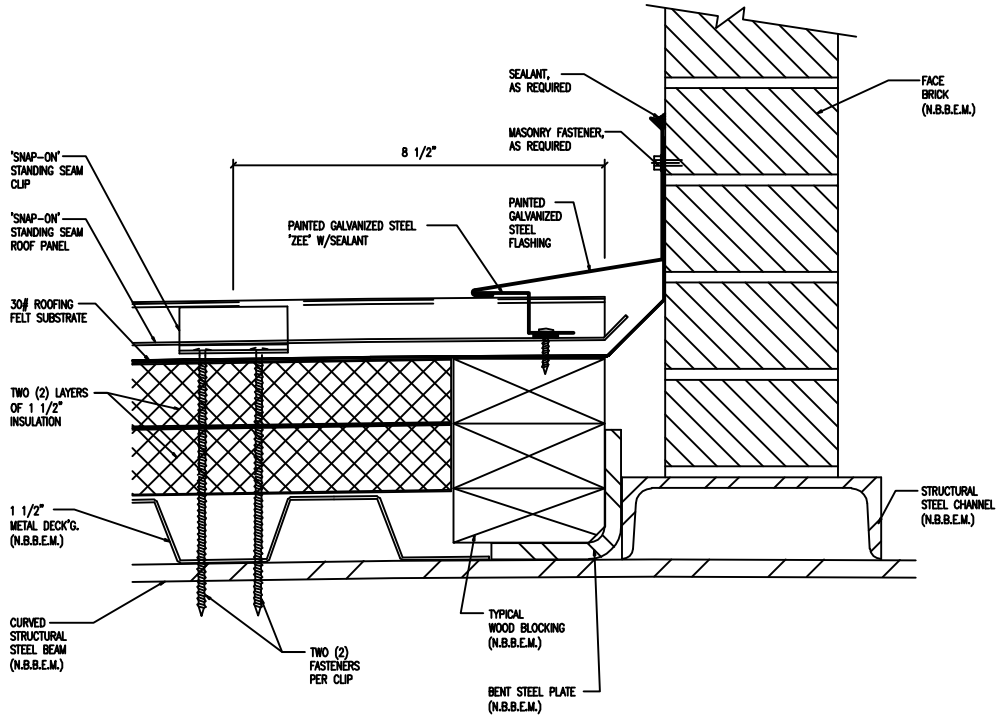

3/6 DETAIL AT ROOF PANEL
REFERENCE: NONE SCALE: 1/2 FULL-SIZE

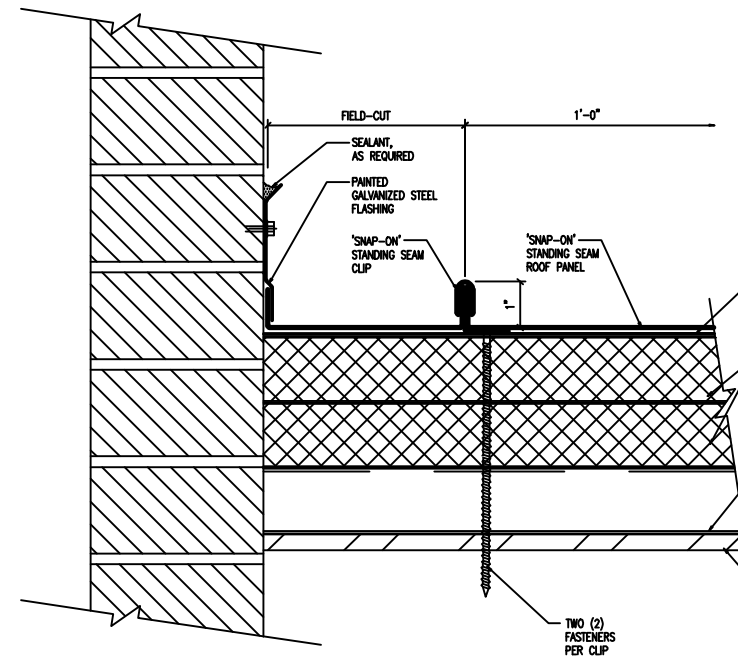

4/6 DETAIL AT ROOF PANEL
REFERENCE: NONE SCALE: 1/2 FULL-SIZE

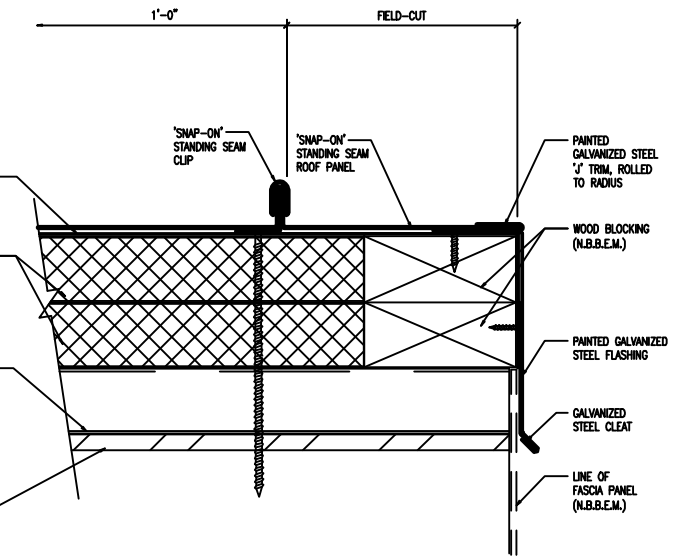

5/6 DETAIL AT ROOF PANEL
REFERENCE: NONE SCALE: 1/2 FULL-SIZE

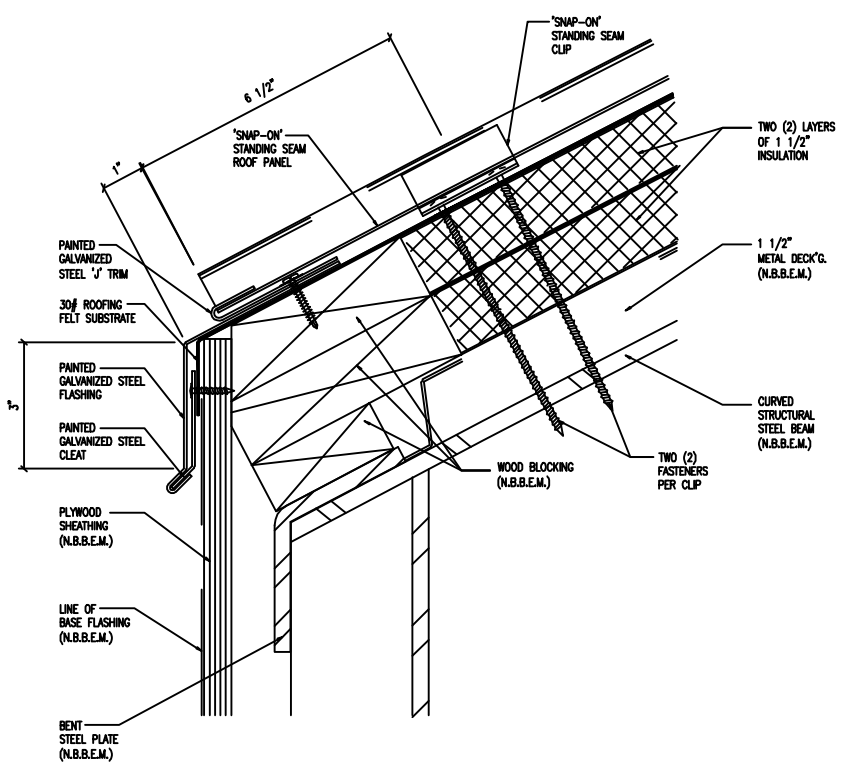

6/6 DETAIL AT ROOF PANEL
REFERENCE: NONE SCALE: 1/2 FULL-SIZE

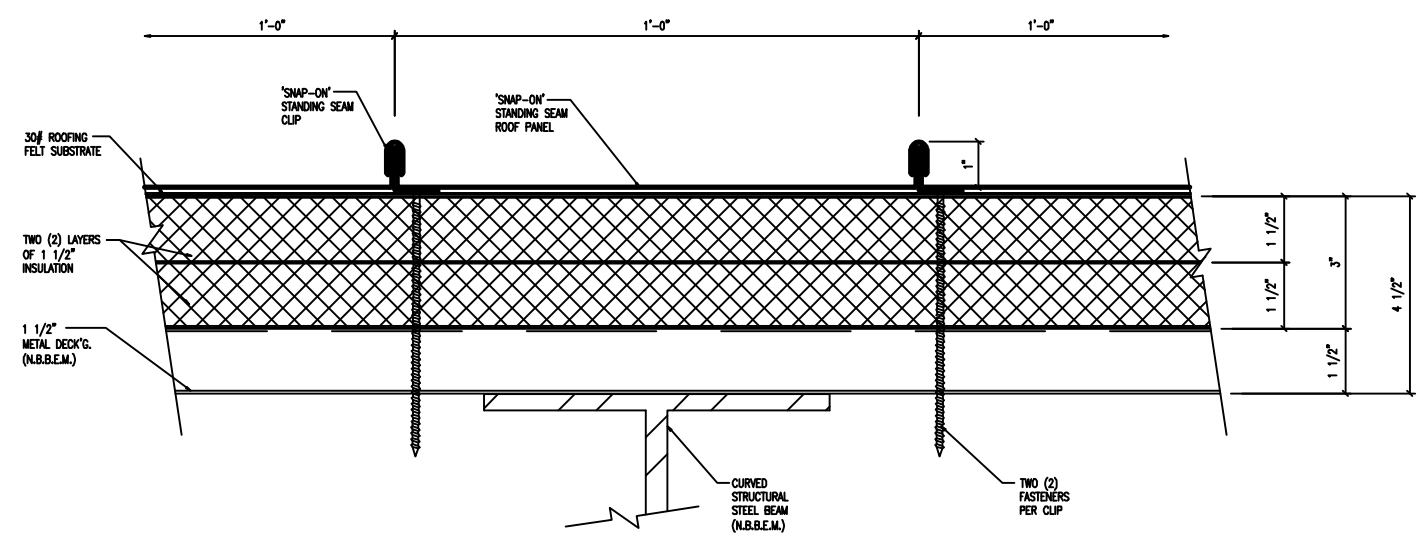

7/6 DETAIL AT ROOF PANEL
REFERENCE: NONE SCALE: 1/2 FULL-SIZE

REVISION:	DATE: